This document must not be copied without our written permission, and the contents thereof must not be imparted to a third party nor used for any unauthorised purpose. Contravention will be prosecuted. Purus AB

Denna handling får ej utan vårt medgivande kopieras.
Den får ej heller delgivas annan eller på annat sätt röjas innehållet.
Överträdelse leder därmed till skadestånd enligt lag. Purus AB

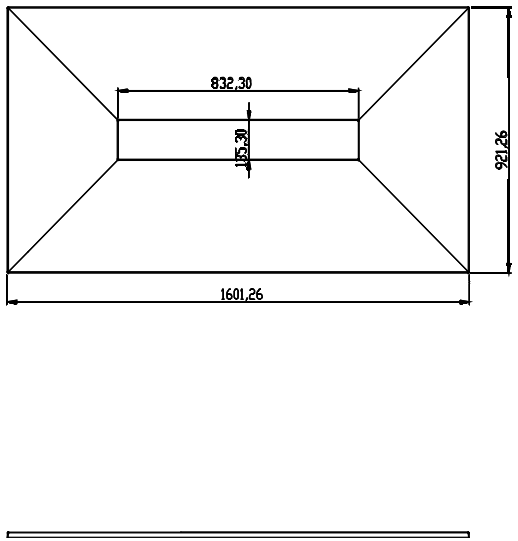

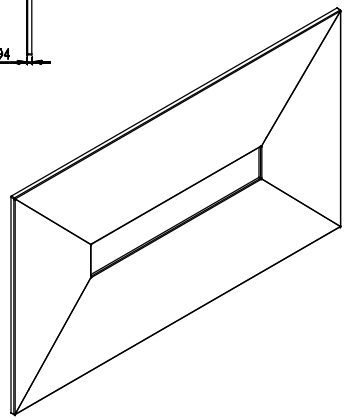

Annotation		A3	This drawing replace	Replaced by	Date
PURUS Purus AB Stora Dragongatan 15 SE-871 30 YSTAD, SVERIGE Ph. +46 304-44950 Fax +46 304-44956 www.purus.se	Scale 1:10	Page 1(1)	General tolerance: ISO 2768 (height tyrad)	Values (mm)	Approved by Date
	Material		Surface treatment	Designer	Created date
	Name			Article no Purus 1600 x 920	Edition